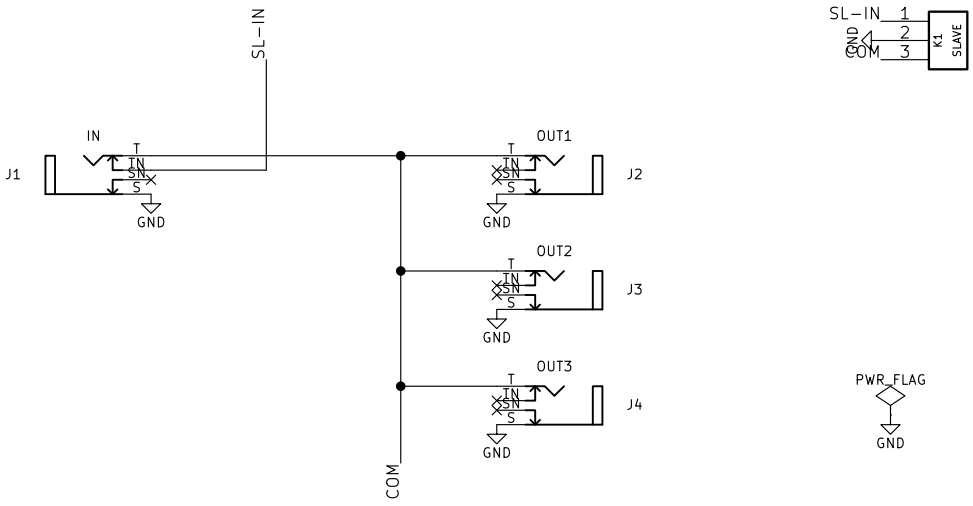
SL-IN
IN
J1
T
IN
SN
S
GND
OUT1
J2
OUT2
J3
OUT3
J4
COM
SL-IN
GND
COM
1
2
3
K1
SLAVE
PWR_FLAG
GND